A/T Gear Position Indicator

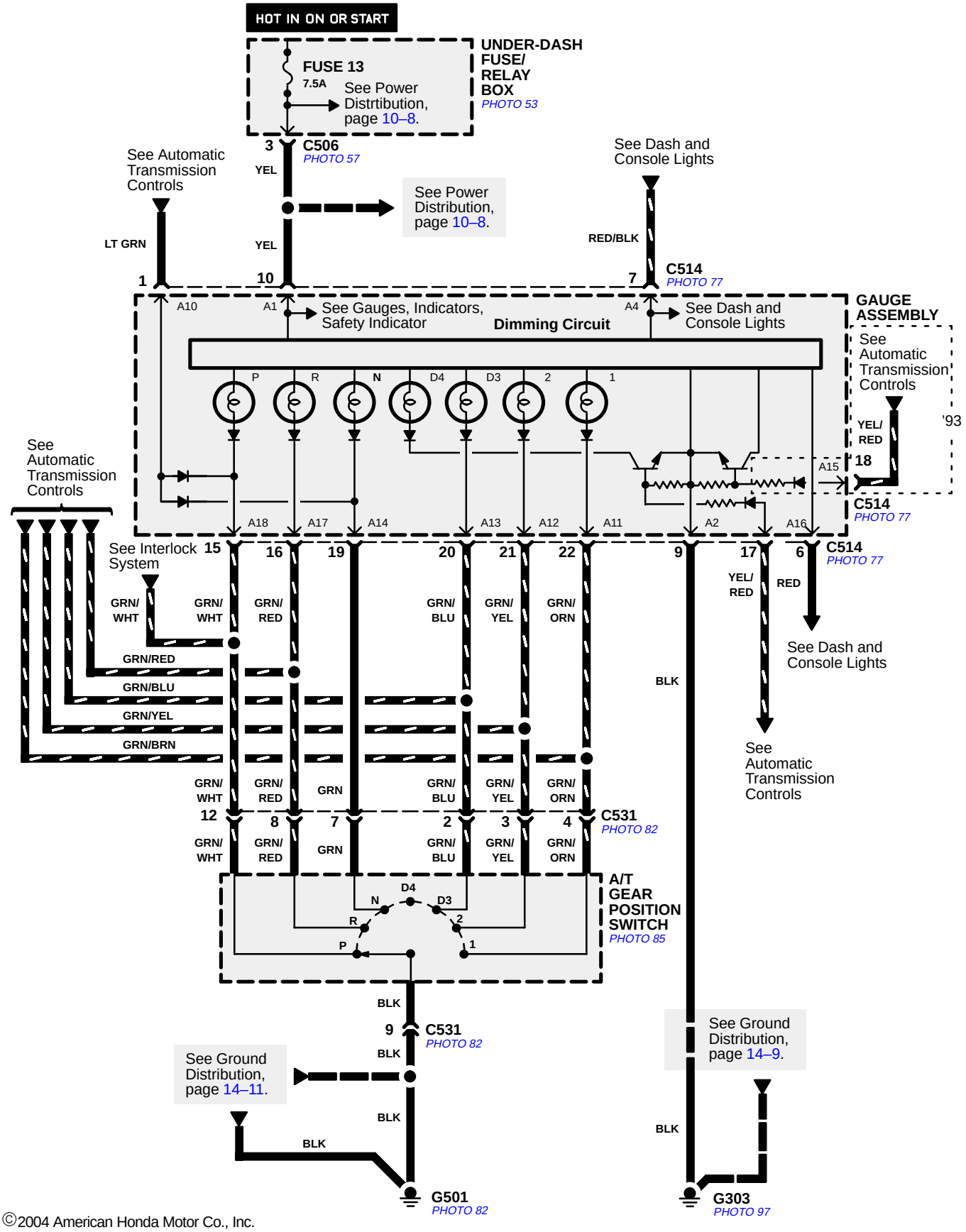

©2004 American Honda Motor Co., Inc.